HPN Top-of-Rack Play Guide

Cross-Selling Solutions

Audience: For all HP sales roles

March 2015

© Copyright 2014 Hewlett-Packard Development Company, L.P. The information contained herein is subject to change without notice.

Positioning HP Networking with HP Servers & Storage

© Copyright 2013 Hewlett-Packard Development Company, L.P. The information contained herein is subject to change without notice. **Restricted. For HP and Channel Partner Internal Use. May be shared with select customers under NDA.**

Why HPN Top-of-Rack w/ HP Servers & Storage?

Top of Rack Business Value

As enterprise data centers continue to grow in size and scale with hybrid cloud deployments, storage demand and mobility, the deployments have moved from individual servers to the blade frame and now to a whole rack. To support rack-level deployment, simplified rack provisioning and flexible networking architectures have become essential. Anyone considering building new data centers without serious assessment of top of rack options will end up spending more than necessary and increase operational complexity.

Top of rack network designs with HP Networking switches deliver a standard, flexible and more flattened architecture to scale out capacity and simplify provisioning for the on-demand networking. HP's leadership in software defined networking focuses on software capabilities & workloads and not just hardware "speeds & feeds." HP Networking enables functionality with a unified fabric and tight integration with HP's server virtualization management and HP storage over Ethernet.

© Copyright 2013 Hewlett-Packard Development Company, L.P. The information contained herein is subject to change without notice. **Restricted. For HP and Channel Partner Internal Use. May be shared with select customers under NDA.**

HPN Top of Rack (ToR) Selling Approach

Play Guide Methodology

This guide provides direction on which HPN Top of Rack switch should be recommended with which server based on workloads. The server configuration tool with Sales Builder and the networking configuration tool with IRIS will still be required to complete a final bill of material. Engage a pre-sales technical resource to assist.

1. Start with the Sales Plays
2. Each Sales Play have specific workloads or applications that require a recommended server/storage – HPN ToR switch combination
3. For each workload – the ToR play guide offers guidance on the server family with the respective HPN ToR switch family including SKU level guidance and competitive differentiation
4. Specific positioning is also included for 3PAR storage and the HPN 5900 converged port switch

© Copyright 2013 Hewlett-Packard Development Company, L.P. The information contained herein is subject to change without notice. **Restricted. For HP and Channel Partner Internal Use. May be shared with select customers under NDA.**

Industry's most complete portfolio

Workload optimized, engineered for any demand

HP ProLiant ML

Expandable Tower servers

HP ProLiant DL

Versatile Rack-optimized servers

HP ProLiant BL

Cloud-Ready Converged Infrastructure

HP ProLiant SL

Purpose-Built Density optimized compute

HP Moonshot

Software-Defined cartridge based compute

HP Apollo

Optimized rack-scale computing for HPC

Branch Office Support | Backup | Virtualization | Client Mobility | Unified Communications | HPC | Big Data | Cloud

General — *Specialized*

HPN 2920

24 and 48 Port Lite Gigabit Ethernet Stackable Switches with 10Gig uplink ports

HPN 5700

FlexFabric Gigabit Ethernet Switches with 10/40Gbps Uplink Ports

HPN 5920

FlexFabric 24 port 10 Gigabit Ethernet Switch with Large Buffer designed for iSCSI and app bursting

HPN 5900

FlexFabric 48 port 10 Gigabit Ethernet Switch with large buffer and 40Gbps uplink ports

© Copyright 2013 Hewlett-Packard Development Company, L.P. The information contained herein is subject to change without notice. **Restricted. For HP and Channel Partner Internal Use. May be shared with select customers under NDA.**

HP Converged Data Center Better Together

Only Vendor That Offers Servers, Storage, Security and Networking integrated into OneView and Managed One Way!

71% of IT executives believe open standards critical!

- ✓ **Open Standards Architecture**
- ✓ **Simplified design and operations**
- ✓ **One OS/Feature consistency**
- ✓ **One Management with OneView**
- ✓ **No licensing complexity/cost**
- ✓ **Highly Resilient Fabric**
- ✓ **Leading SDN Technology following SDN Specs!**

© Copyright 2013 Hewlett-Packard Development Company, L.P. The information contained herein is subject to change without notice. **Restricted. For HP and Channel Partner Internal Use. May be shared with select customers under NDA**

Sales Play #1
“Building the On-Demand IT Infrastructure”

© Copyright 2013 Hewlett-Packard Development Company, L.P. The information contained herein is subject to change without notice. **Restricted. For HP and Channel Partner Internal Use. May be shared with select customers under NDA.**

Workload: Virtualization

Customer Need: Server optimization, Application portability, Consolidation

Low density, General purpose Virtualization
- ProLiant DL series Rack servers (DL360/DL380)
- HPN 2900 or 5700 series switches
- HP StoreVirtual VSAN software

High density, Mission Critical Virtualization
- HP BladeSystem with Virtual Connect FlexFabric and BL460c Gen9 Blades
- HPN 5900CP series converged switches
- HP 3PAR 7200 SAN

Appliance Based, On Demand Virtualization
HP Converged System CS700
- Pre engineered, pre-built, performance tested
- HPN 5900 series switches or 6125XLG Blade Switch
- One certified stack, buy in “blocks” of compute/networking/storage

© Copyright 2013 Hewlett-Packard Development Company, L.P. The information contained herein is subject to change without notice. **Restricted. For HP and Channel Partner Internal Use. May be shared with select customers under NDA.**

Workload: Virtualization

Example SKU's and Descriptions

	Server SKUs	HPN ToR SKUs	HPN ToR Competitive Advantage (over Cisco and/or Arista)
Low density, General purpose Virtualization	DL360 - 755262-B21 (base configuration) DL380 - 752687-B21 (base configuration)	J9726A - HP 2920-24G Switch J9728A - HP 2920-48G Switch JG894A - HP FF 5700-48G-4XG-2QSFP+ Switch	• Low TCO, Optimized for Software Defined Networks, Industry leading warranty (2920) • Low CapEx, TCO and Advanced Data Center Fabric Capabilities (5700)
High density, Mission Critical Virtualization	HP BLc7000 Platinum Series Enclosure with OneView 763850-B21 (enclosure ONLY, Servers configured separately)	JG838A - HP FF 5900CP-48XG-4QSFP+ Switch	• 10 Gigabit Ethernet, Multi-Hop 40 Gig FCoE, Low TCO, All features included as standard. (No additional Software needed)
Appliance Based, On Demand Virtualization	HP Converged System CS700 (no SKU available per QS)	JG336AHP 5900AF-48XGT-4QSFP+ Switch	• 10 Gigabit Ethernet, Low TCO, All features included as standard. (No additional Software needed)

Note:

© Copyright 2013 Hewlett-Packard Development Company, L.P. The information contained herein is subject to change without notice. **Restricted. For HP and Channel Partner Internal Use. May be shared with select customers under NDA.**

Workload: Cloud

Customer need: Infrastructure as a Service, Platform as a Service

"Build it Yourself" Private Cloud

- HP BladeSystem with Virtual Connect FlexFabric and BL460c Gen9 Blades
- HPN 5900 series converged switches
- HP 3PAR 7200 SAN
- HP CSA Software, Vmware Vcloud director, or orchestrator of choice

Private/Hybrid Cloud

- HP CloudSystem 8 for end to end HP solution
  - HP BladeSystem, HP 5700 or 5900 series ToR, HP 3PAR storage, HP CloudSystem SW
- HP Helion for universal, OpenStack, Heterogeneous Cloud

Why SDN…Software Defined Networking?

https://www.youtube.com/watch?v=b5JNMDWt4lA

© Copyright 2013 Hewlett-Packard Development Company, L.P. The information contained herein is subject to change without notice. **Restricted. For HP and Channel Partner Internal Use. May be shared with select customers under NDA.**

Workload: Cloud

Example SKU's and Descriptions

	Server SKUs	HPN ToR SKUs	HPN ToR Competitive Advantage (over Cisco and/or Arista)
"Build it Yourself" Private Cloud	HP BLc7000 Platinum Series Enclosure with OneView 763850-B21 (enclosure ONLY, Servers and FlexFabric interconnects configured separately)	JG838A - HP FF 5900CP-48XG-4QSFP+ Switch	• 10 Gigabit Ethernet, Low TCO, Multi-Hop FCoE over 40Gigabit Ethernet Links, All features included as standard. (No additional Software needed)
Private/Hybrid Cloud	HP BLc7000 Platinum Series Enclosure with OneView 763850-B21 (enclosure ONLY, Servers and Network interconnects configured separately)	JG336AHP 5900AF-48XGT-4QSFP+ Switch JG894A - HP FF 5700-48G-4XG-2QSFP+ Switch	• Low CapEx, TCO and Advanced Data Center Fabric Capabilities (5700) • 10 Gigabit Ethernet, Low TCO, All features included as standard. (No additional Software needed)

© Copyright 2013 Hewlett-Packard Development Company, L.P. The information contained herein is subject to change without notice. **Restricted. For HP and Channel Partner Internal Use. May be shared with select customers under NDA.**

Sales Play #2
“Enabling the Hyper-connected Workplace”

© Copyright 2013 Hewlett-Packard Development Company, L.P. The information contained herein is subject to change without notice. **Restricted. For HP and Channel Partner Internal Use. May be shared with select customers under NDA.**

Workload: Unified Communications

Customer need: Communications convergence, Network optimization

HP Unified Solutions around Microsoft LYNC
- ProLiant DL series Rack servers (DL360/DL380) – SDN controller
- HP 2920 with SDN support
- Microsoft LYNC SDN App

It's Not Lync…It's The Network!

https://www.youtube.com/watch?v=_nrNXvo-i2E

© Copyright 2013 Hewlett-Packard Development Company, L.P. The information contained herein is subject to change without notice. **Restricted. For HP and Channel Partner Internal Use. May be shared with select customers under NDA.**

Workload: Unified Communications

Example SKU's and Descriptions

	Server SKUs	HPN ToR SKUs	HPN ToR Competitive Advantage (over Cisco and/or Arista)
HP Unified Solutions around LYNC	Proliant DL360/380 J9863AAE - HP VAN SDN Ctrl Base SW w/ 50-node E-LTU Network Optimizer App	J9726A - HP 2920-24G Switch J9728A - HP 2920-48G Switch	• Low TCO, Optimized for Software Defined Networks and MS Lync, Industry leading warranty (2920)

© Copyright 2013 Hewlett-Packard Development Company, L.P. The information contained herein is subject to change without notice. **Restricted. For HP and Channel Partner Internal Use. May be shared with select customers under NDA.**

Workload: Client Virtualization

Customer need: User mobility, Client cost reduction, Security

VDI – Virtual Desktop Infrastructure, Low density, General purpose user
- ProLiant DL series Rack servers (DL360/DL380)
- HPN 2920 series switches
- HP StoreVirtual VSAN software

VDI – Virtual Desktop Infrastructure, High Density, diverse users
- HP BladeSystem with BL460c Gen9 Blades, Workstation blades
- HPN 5900 series converged switches
- HP 3PAR 7425 Flash-based SAN

HDI – Hosted Desktop Infrastructure
- HP CS100 with Moonshot technology, 180 hosted desktops with Citrix Xen Desktop
- HP 5930 with 40Gb ports for performance.

© Copyright 2013 Hewlett-Packard Development Company, L.P. The information contained herein is subject to change without notice. **Restricted. For HP and Channel Partner Internal Use. May be shared with select customers under NDA.**

Workload: Client Virtualization

Example SKU's and Descriptions

	Server SKUs	HPN ToR SKUs	HPN ToR Competitive Advantage (over Cisco and/or Arista)
VDI – Virtual Desktop Infrastructure, Low density, General purpose user	DL360 - 755262-B21 (base configuration) DL380 - 752687-B21 (base configuration)	J9726A - HP 2920-24G Switch J9728A - HP 2920-48G Switch	• Low TCO, Optimized for Software Defined Networks, Industry leading warranty (2920)
VDI – Virtual Desktop Infrastructure, High Density, diverse users	HP BLc7000 Platinum Series Enclosure with OneView 763850-B21 (enclosure ONLY, Servers configured separately)	JG838A - HP FF 5900CP-48XG-4QSFP+ Switch	• 10 Gigabit Ethernet, Low TCO, Multi-Hop FCoE over 40Gigabit Ethernet Links, All features included as standard. (No additional Software needed)
HDI – Hosted Desktop Infrastructure	HP CS100 Standard Model Starter Kit - G6F51A	JG726A - HP FF 5930-32QSFP+ Switch	• High Density 40 Gig with Low TCO, Advanced Data Center Fabric features, All features included as standard. (No additional Software needed)

© Copyright 2013 Hewlett-Packard Development Company, L.P. The information contained herein is subject to change without notice. **Restricted. For HP and Channel Partner Internal Use. May be shared with select customers under NDA.**

Sales Play #3 Workloads “Empowering a Data-Driven Enterprise”

© Copyright 2013 Hewlett-Packard Development Company, L.P. The information contained herein is subject to change without notice. **Restricted. For HP and Channel Partner Internal Use. May be shared with select customers under NDA.**

Workload: High Performance Computing

Customer need: High compute clustering for specialized Applications

High Density /low performance compute, low to medium interconnect (Scale out)
- ProLiant DL series Rack servers (DL10/DL160)
- HPN 2900 series switches (Ethernet 1GB)

Medium Density, medium performance compute (midrange scale up)
- HP SL series 2500 with 10Gb or Infiniband interconnect modules
- HPN 5900 series switches

Extreme Density, High performance (Massive scale out, modular compute)
HP Apollo
- HPN 5900 series switches or HPN 5930 series Switches with 40/100Gbps capability

© Copyright 2013 Hewlett-Packard Development Company, L.P. The information contained herein is subject to change without notice. **Restricted. For HP and Channel Partner Internal Use. May be shared with select customers under NDA.**

Workload: High Performance Computing

Example SKU's and Descriptions

	Server SKUs	HPN ToR SKUs	HPN ToR Competitive Advantage (over Cisco and/or Arista)
High Density /low performance compute, low to medium interconnect (Scale out)	DL60 - 785836-B21 Base Model DL160 - 769505-B21Base Model	J9726A - HP 2920-24G Switch J9728A - HP 2920-48G Switch	• Low TCO, Optimized for Software Defined Networks, Industry leading warranty (2920)
Medium Density, medium performance compute (midrange scale up)	HP SL series 2500 - 718404-B21 Configure to order chassis HP ProLiant SL210t Gen8 1U Node - 718406-B21	JG838A - HP FF 5900CP-48XG-4QSFP+ Switch	• 10 Gigabit Ethernet, Low TCO, Multi-Hop FCoE over 40Gigabit Ethernet Links, All features included as standard. (No additional Software needed)
Extreme Density, High performance (Massive scale out, modular compute) **HP Apollo**	HP Apollo	JG336AHP 5900AF-48XGT-4QSFP+ Switch	• 10 Gigabit Ethernet, Low TCO, All features included as standard. (No additional Software needed)

© Copyright 2013 Hewlett-Packard Development Company, L.P. The information contained herein is subject to change without notice. **Restricted. For HP and Channel Partner Internal Use. May be shared with select customers under NDA.**

Workload: Big Data

Customer need: Data analytics and data correlation

Small to Medium Sized Analytic Appliance
- ProLiant SL4540 (Shared storage, multi-node compute)
- HP 5900 series switches
- Apache, Hadoop, Cloudera

Reference Architecture – Cloudera Enterprise on SL4540

Cloudera on HP
- ProLiant DL360 /DL380 servers
- HP5930, HP5900AF series switches

Reference Architecture – for Cloudera Enterprise

HortonWorks on HP
- ProLiant DL360/DL380 Servers
- HP 5930AF, HP5900AF series switches

Reference Architecture – for HortonWorks

© Copyright 2013 Hewlett-Packard Development Company, L.P. The information contained herein is subject to change without notice. **Restricted. For HP and Channel Partner Internal Use. May be shared with select customers under NDA.**

Workload: Big Data

Example SKU's and Descriptions

	Server SKUs	HPN ToR SKUs	HPN ToR Competitive Advantage (over Cisco and/or Arista)
Small to Medium Sized Analytic Appliance	ProLiant SL4540 - 748409-001 (Preconfigured 3 node)	JG336AHP 5900AF-48XGT-4QSFP+ Switch	• 10 Gigabit Ethernet, Low TCO, All features included as standard. (No additional Software needed)
Cloudera on HP	DL360 - 755262-B21 (base configuration) DL380 - 752687-B21 (base configuration)	JC691AHP 5830AF-48G Switch w/1 Interface Slot JG336AHP 5900AF-48XGT-4QSFP+ Switch	10 Gigabit Ethernet, Low TCO, All features included as standard. (No additional Software needed)
HortonWorks on HP	DL360 - 755262-B21 (base configuration) DL380 - 752687-B21 (base configuration)	JC691AHP 5830AF-48G Switch w/1 Interface Slot JG336AHP 5900AF-48XGT-4QSFP+ Switch	10 Gigabit Ethernet, Low TCO, All features included as standard. (No additional Software needed)

© Copyright 2013 Hewlett-Packard Development Company, L.P. The information contained herein is subject to change without notice. **Restricted. For HP and Channel Partner Internal Use. May be shared with select customers under NDA.**

HP Networking 5900CP Switch & Storage

“Wire Once / Store Once”

© Copyright 2013 Hewlett-Packard Development Company, L.P. The information contained herein is subject to change without notice. **Restricted. For HP and Channel Partner Internal Use. May be shared with select customers under NDA.**

Why HP FlexFabric 5900CP? - The Future of DC convergence

Simple

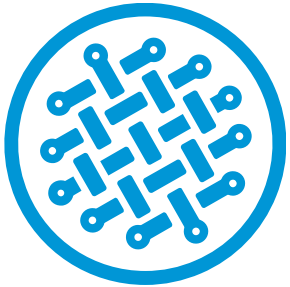

Wire once

Converged

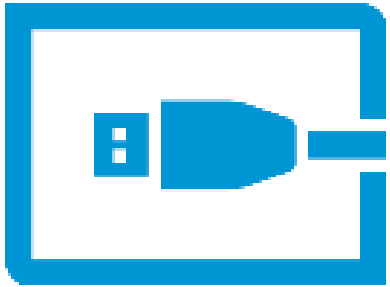

Versatile ports & Optics

Automated

IMC, IRF and SDN

© Copyright 2013 Hewlett-Packard Development Company, L.P. The information contained herein is subject to change without notice. **Restricted. For HP and Channel Partner Internal Use. May be shared with select customers under NDA.**

Converged Ports & Optics – Wire Once
Versatile connectivity

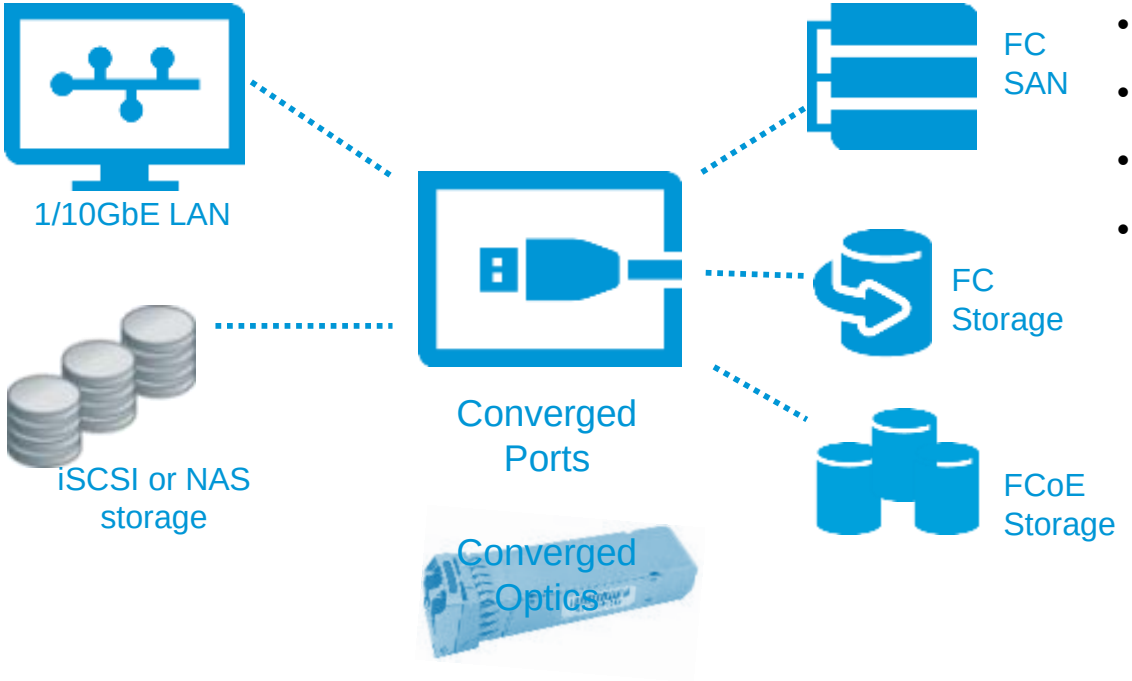

- ALL ports are converged
- Connect to LANs & SANs
- Wire once optics
- One OS license for ALL features

1st to market with converged optics

© Copyright 2013 Hewlett-Packard Development Company, L.P. The information contained herein is subject to change without notice. **Restricted. For HP and Channel Partner Internal Use. May be shared with select customers under NDA.**

HP 5900CP enables data center convergence

48 converged ports & universal optics for simple data center convergence

Product Feature	Customer Benefit
48 converged ports with 1/10GbE and 4/8G FC	Versatile storage and data connectivity for top-of-rack switches
4*40 GbE QSFP+ uplinks	High bandwidth uplinks for demanding applications
No License needed for full L2/L3, IPv4/IPv6 dual stack, DCB, FC, FCoE, TRILL and more	Best industry licensing model with no hidden costs and investment protection. No port upgrades or PODs
Virtual switches with HP IRF – 9 switches Ethernet fabric	Pay-as-you-grow model for scalable DCs with simpler management delivering lower CapEx and OpEx
Universal optics that support Ethernet and FC	Wire once simplicity for networking and storage interfaces
Flexible front to back or back to front airflow	Ready for DC versatile designs with hot-cold Isle Deployments
Qualified with HP 3PAR storage	Peace of mind with HP qualified networking and storage solutions

© Copyright 2013 Hewlett-Packard Development Company, L.P. The information contained herein is subject to change without notice. **Restricted. For HP and Channel Partner Internal Use. May be shared with select customers under NDA.**

Deploying the FlexFabric 5900CP

Use with HP & 3PAR storage in converged environments

Converged data centers with FCoE

- New data centers, or new tier-2 applications
- Add to, or upgrade current FCoE environments
- HP 5900CP is qualified with HP CNAs & FCoE storage

10/40GbE data center networks

- Upgrade to 10/40GbE with option to add iSCSI, or FCoE later
- Also consider HP FlexFabric 5900AF switch series
- HP 5900CP is qualified with HP iSCSI storage

Fibre Channel storage & SANs

- HP 5900CP is qualified with HP CNAs, HBAs, 3PAR and HP FC storage
- Consult your sales representative for tested storage configurations

© Copyright 2013 Hewlett-Packard Development Company, L.P. The information contained herein is subject to change without notice. **Restricted. For HP and Channel Partner Internal Use. May be shared with select customers under NDA.**

HP FlexFabric 5900CP switch series

Ordering information

SKU	Description
JG838A	HP FlexFabric 5900CP top-of-rack switch
JC680A	AC power supply
JC681A	DC power supply
JC682A	Back-to-front fan tray
JC683A	Front-to-back fan tray
H6Z42A	HP StoreFabric 4/8/16GFC/1/10GE 100m SFP+ XCVR transceiver (available on storage price list)

© Copyright 2013 Hewlett-Packard Development Company, L.P. The information contained herein is subject to change without notice. **Restricted. For HP and Channel Partner Internal Use. May be shared with select customers under NDA.**

HP FlexFabric 5900CP optics

HP FlexFabric 5900CP supported optics

SKU	Description
H6Z42A	HP StoreFabric 16/8/4G FC & 1/10GE 100m SFP+ XCVR transceiver (available on storage price list)
AW584A	HP 8Gb Long Wave 10km Fibre Channel SFP+ 1 Pack Transceiver
AJ718A	HP Fibre Channel Short Wave Optic 8/4/2G FC
JG329A	1m 40GE to10GE splitter cable
JG330A	3m 40GE to10GE splitter cable
JG331A	5m 40GE to10GE splitter cable

Also supports are ALL 10/40 SFP+ & QSFP+ cables used by HP 5900 switches

© Copyright 2015 Hewlett-Packard Development Company, L.P. The information contained herein is subject to change without notice. **Restricted. For HP and Channel Partner Internal Use. May be shared with select customers under NDA**

HP FlexFabric: Simpler converged deployment

Cisco's Complex Model

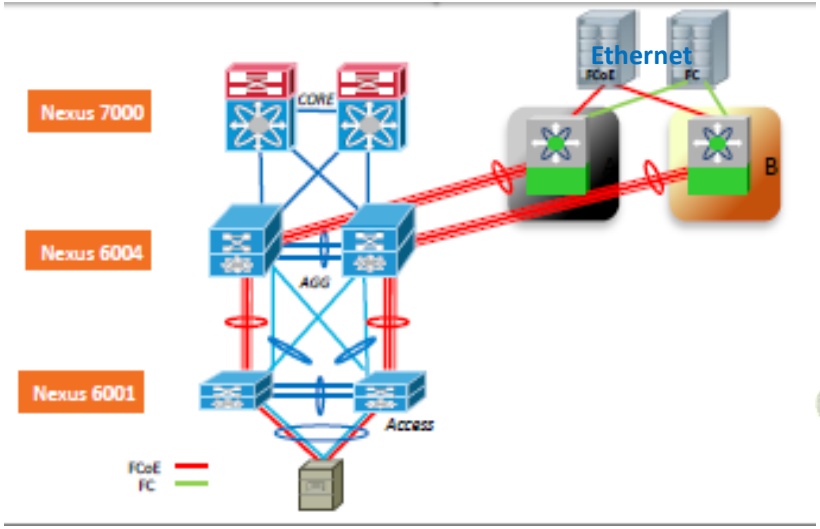

HP Simpler Converged Network

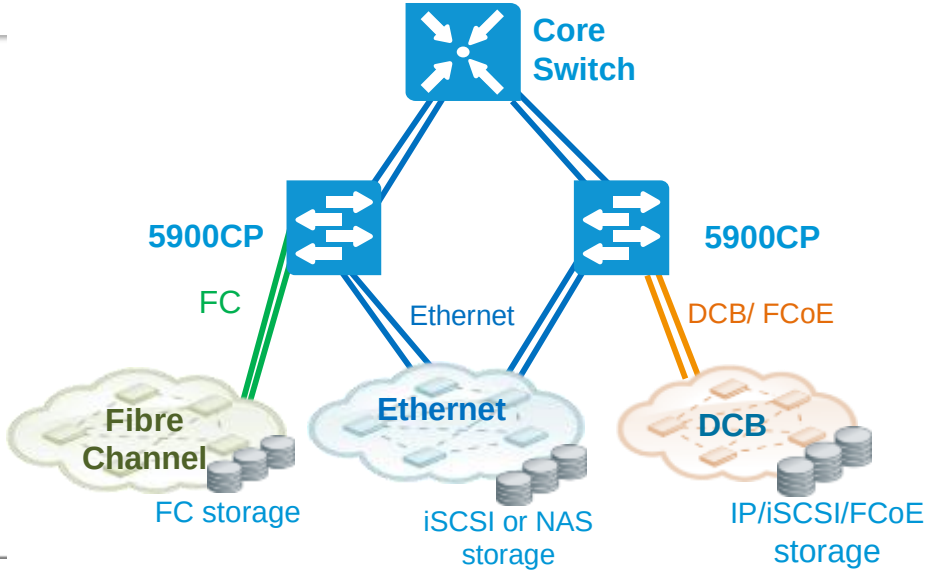

Source: Cisco 2013

© Copyright 2013 Hewlett-Packard Development Company, L.P. The information contained herein is subject to change without notice. **Restricted. For HP and Channel Partner Internal Use. May be shared with select customers under NDA.**